| Dimensions | Electrical diagram |
|---|---|

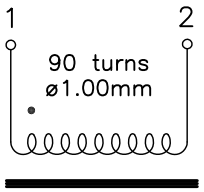


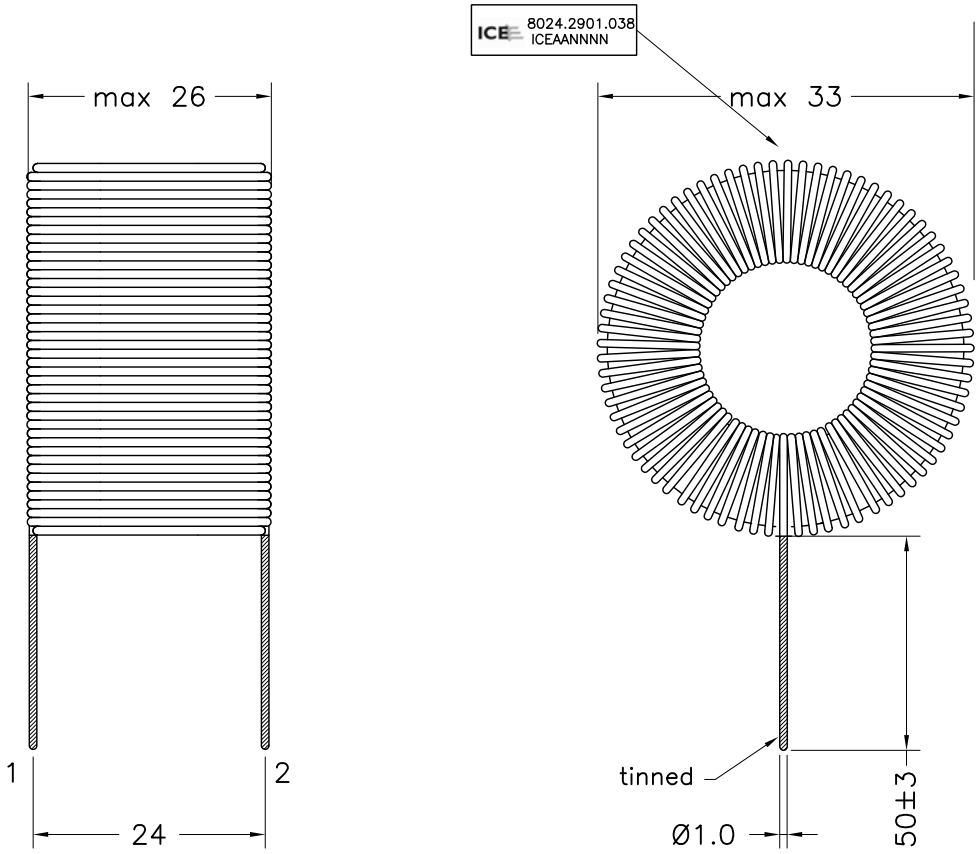


Dimensions in millimeters

2015/863/UE (RoHS-3) compliant

## Electrical features

| | |
|---|---|
| Inductance 1-2 @ 10 kHz - 100 mV - no load | 0.90 ÷ 1.10 mH |
| Resistance 1-2 @ DC | < 200 mΩ |
| Core - material | Chang Sung Corp. - CH270060GT18 |
| Copper Wire grade 2, thermal class 200°C | MW35-C E60641 or equivalent |
| | |

| REV | APPR DATE | RIF. MOD. | DESCRIPTION OF MODIFICATION | EMITTED | CHECK AND APPROVAL |
|---|---|---|---|---|---|
| 01 | 04.07.23 | | Release | C. Picciani | C. Picciani |

DESCRIPTION **PFC choke 1mH**

| Mod. AQ 05.09 | DOCUMENT TYPE | CODE | REVISION | RELASE DATE | PAGE |
|---|---|---|---|---|---|
| | S.T. | 8024.2901.038 | 01 | 04.07.23 | 1of1 |